User manual for

Exalto

Wiper Technologies since 1965

Exalto windscreen wiper type 223BDO (Item no. XA2165.xx/XA2166.xx)

Dear Customer,

Thank you for buying our products.
Exalto wiper systems are designed and manufactured to the highest standards for marine applications. We guarantee you a clear view for many years.

Complete range of products
We offer a wide range of wiper systems for all types of vessels, both leisure and commercial. For the leisure market we cover all windows with our LD and MD wipers. For commercial use we have our HD wipers to offer perfect wiping of large window sizes. We also can provide linked or straight line systems. Please see the below table as an overview.

After sales support
We have an excellent after sales support. Our wiper specialists can provide a comprehensive advice to ensure the system works accurately and to your wishes. Should problems occur with the product, it is always our main priority to solve it quickly and accurately, with the help of your local dealer close by you.

Exalto window wiper systems

Window height	up to 1100mm		up to 1600mm	between 1100-2500mm	
Nm range	15	23 - 35	40	55	85 - 120
Motor series	215	223 232	240	255	285 2120
Arms series	LD (LD)	MD1 (PU)	MD2 (PF)	HD1 (P10)	HD2 (P12)

Contents

Use of the manual

Read the entire manual before installation. In this manual you can find the following expressions and symbols:

Hint!

Gives you advice on how to perform a task more easily.

Attention!

Alerts you to possible problems and safety warnings.

Safety

Exalto windscreen wipers are easy to install, yet a fair amount of technical knowledge (mechanical and electrical) is required of the installer. Please consult the manual or contact your vendor in case of doubt during installation or operation.

Main Precaution

Disconnect all the electric connections of the wiper before making any change to the wiper system.

Safety symbols

An exclamation mark in front of the text warns you, that injury or damage can occur if a procedure is badly performed.

Dangers

The installation and use of Exalto wipers will not inflict any personal dangers or damage, provided that installation is done according to the procedures specified in the manual.

- Never remove covers or other safety provisions, unless maintenance is being performed and all safety requirements are obeyed.
- The installer must provide all necessary covers.
- Always disconnect the electrical power when performing maintenance.

Prevent the installation from being started (accidentally) by others.

Safety provisions

The safety provisions will protect the user against contact with moving, electrical or hot parts. Some of these have to be provided by the installer. There are several safety provisions:

- Cover or panel (obligatory): covers moving parts and electrical connections. The installer MUST provide a self-made cover or place the wiper behind a panel.
- Make sure the wiper has enough ventilation when placing it behind a panel or cover.
- Place a fuse (see specifications) sized to protect the motor.

Safety requirements

Before the Exalto wiper is installed, we strongly recommend the following:

- Read the entire manual before installation.
- Make sure your working environment as well as the wiper parts are clean.
- Check to be sure no parts are missing or damaged.
- Use only high quality tools and have them within reach when installing.
- Handle the parts with care.
- Never install or maintain the wiper with the electrical voltage applied, unless this is specifically mentioned in the manual.
- Clear your tools after installation.

1. Introduction

With this user manual we want to guide you in the installation and use of the Exalto windscreen wiper. Please follow all instructions and install all safety provisions.

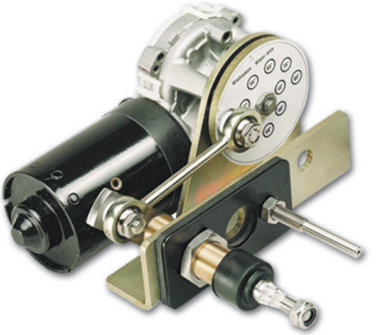

1.1 Introduction

Exalto windscreen wipers are especially designed to keep working even with the most extreme weather conditions at sea. All external parts are made of corrosion resistant materials. The spindle housings with the self-lubricating bearings are made of naval brass. The wiper is designed to be mounted through the bulkhead or glass, above or below the window. The wipe arc is adjustable from 40° to 90° with steps of 5°. Standard this model is supplied for a bulkhead thickness of either 20, 35, 55, 75, 100 or 125mm. The matching Exalto MD1 (PU) pantograph arms are adjustable in length between 375-750mm, to set the wipe area accurately. The motor has insulated earth return.

1.2 Environmental factors

Some materials used in the construction of the wiper motor maybe harmful to the environment (e.g. copper). These parts of the wiper may be re-used or recycled. No harmful substances are released when using or disassembling the wiper.

1.3 Modified use and warranty conditions

All modifications or defects in the product are subject to the Orgalime General Conditions of Sale. Please contact your vendor in case of any questions or if you want to use Exalto wipers in a non-maritime environment or other applications.

2. Technical data

2.1 General

• Product	Exalto windscreen wiper
• Type	223BDO (Bulkhead fitting, Disc adjustable, Open housing)
• Catalogue numbers	XA2165.30/32/35/40/45/50 (12V) XA2166.30/32/35/40/45/50 (24V)

2.2 Electrical data 12 Volt

• Torque (max.)	23 Nm
• Voltage	12 Volt
• Current	3A
• Power consumption (max.)	36 W
• Number of revolutions	Low speed 40 rpm, high speed 60rpm
• Recommended cable	5 wires, 1½ mm^2 (16 g) or 2½ mm^2 (14 g) up to 10 m long
• Recommended fuse	6 A slow blow
• Grounding	Insulated earth return

2.2 Electrical data 24 Volt

• Torque (max.)	25 Nm
• Voltage	24 Volt
• Current	1.5 A
• Power consumption (max.)	36 W
• Number of revolutions	Low speed 40rpm, high speed 60 rpm
• Recommended cable	5 wires, 1½ mm^2 (16 g) or 2½ mm^2 (14 g) up to 10 m long
• Recommended fuse	4 A slow blow
• Grounding	Insulated earth return

2.3 Mechanical data

• Dimensions	L x w x h = 174 x 107 x 103 mm
• Shaft diameters	Drive shaft Ø 20 / support shaft Ø 8 mm at 50 mm ctrs
• Mounting	In bulkhead or glass (20, 35, 55, 75, 100 or 125 mm)
• Bearing	Bronze housing, self-lubricating
• Wiper arms	Model MD1 (PU) up to 750 mm
• Wiper blades	Up to 750 mm
• Wipe arc	Wipe arc 40°-90°, adjustable per 5° increments
• Weight	Approx. 2,30 kg

3. Installation

Before starting the installation read the chapter on safety. Check before installation that all parts are present and undamaged. In case of errors, contact your vendor.

3.1 Preparation

The complete wiper, with packaging, can be handled and transported by hand. Leave the wiper in the packing, until you are ready to install it; this will reduce the risk of damage and loss of parts. Make sure all parts, tools and other means are ready.

3.2 Installation of mechanical parts

1. The wipe arc of your wiper is not pre-set unless specified in the order and manufacturing process. Please follow steps described in paragraphs 5.3 and 5.4 to set the wiping arc prior to installation.
2. Rough determination of wiping arc and wiper blade. With this method the wiping arc and the wiper blade length can roughly be determined. Please contact your vendor to calculate your configuration more accurately.

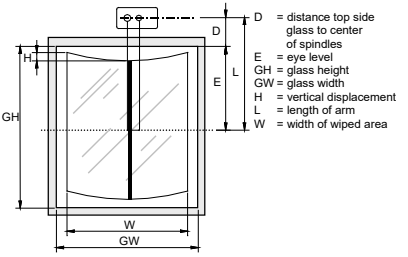

- Determine length of pantograph arm (L):
  L = E + D
- Get the maximum wiped area width (W):
  W = ±0.9 * GW
- Find the intersection of L and W in the diagram below;

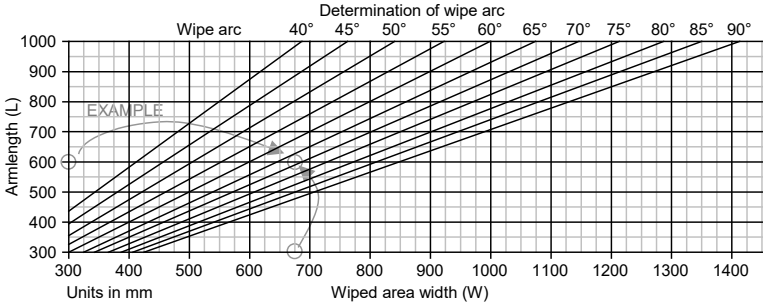

- The wipe arc-line closest to the intersection, shows the wipe arc;
- Find in the table below the vertical displacement of the blade (H);

Determining the vertical displacement of the wiper blade

Armlength (L)	300	350	400	450	500	550	600	650	700	750	800	850	900	950	1000
Wipe arc 40°	19	21	25	26	30	34	37	40	43	45	48	51	54	57	60
45°	23	27	30	35	38	42	46	50	53	57	61	65	68	72	76
50°	26	33	36	43	47	52	56	61	66	70	75	80	84	89	94
55°	34	40	45	51	57	62	66	74	79	85	90	96	102	107	113
60°	40	47	54	60	67	74	80	87	94	100	107	114	121	127	134
65°	47	55	63	71	79	86	94	102	110	117	125	133	141	149	157
70°	55	63	73	81	90	100	109	118	127	136	145	154	163	172	181
75°	62	73	83	93	104	114	124	135	145	155	165	176	186	196	207
80°	70	82	94	105	117	129	140	152	164	175	187	199	211	222	234
85°	79	92	105	119	132	145	158	171	184	197	210	223	236	250	263
90°	86	103	117	132	146	161	176	190	205	220	234	249	264	278	293

Units in mm — Vertical displacement of the blade (H)

Now the wiper blade length can be calculated: **Length of wiper blade = 0.9 * 2 * (E-H).**

3. Determine the place where the wiper is to be installed. The dimensions are shown below. The wiper can be installed in any position above or below the window.

Attention!
When installing the wiper, reserve space for a housing or cover.

4. Place the windscreen wiper in the pre-drilled holes of the bulkhead (see figure). A rubber sealing gasket must be placed at both sides of the bulkhead. Holes sizes are 1 x clearance on M20, 1 x clearance on M8 at 50mm centers.

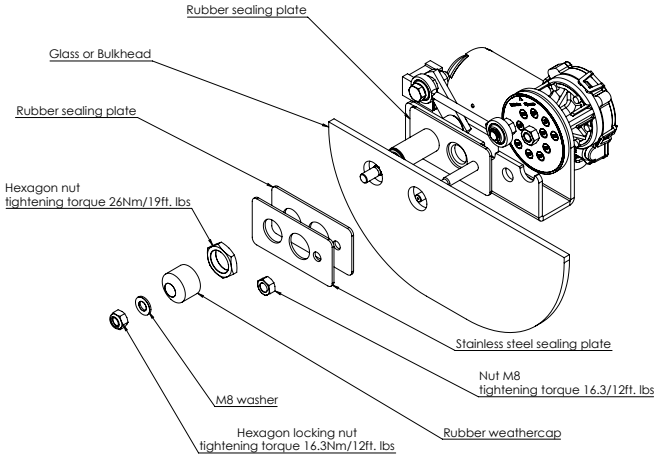

Attention!
Do not fit the wiper arm before finishing the electrical connections.

3.3 Electrical installation

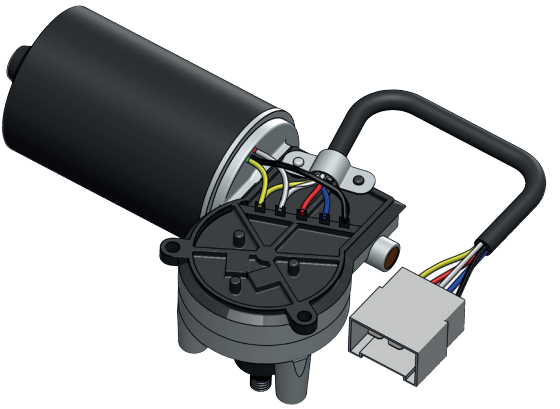

1. Install the wiper switch in the dashboard.
2. Connect the wiper to the ship's electrical system; see from page 18 and the colour codes at page 19. Use a cable with 5 wires with a diameter of at least 1½ mm^2 (16 g) up to a maximum length of 10 m. Use larger diameters when using longer cable lengths greater than 10mtrs.
3. Fit a slow blow fuse of 6A (12Volt) or 4A (24 Volt) in the main cable (positive).
4. Connect the switch to the wiper (refer to the switch manual for installation).

3.4 Final installation

1. Switch on the power and test the motor briefly. Wait until the motor stops after turning off the switch. The motor will be in park position. The standard park position is shown in the figure under point 5.3.2.

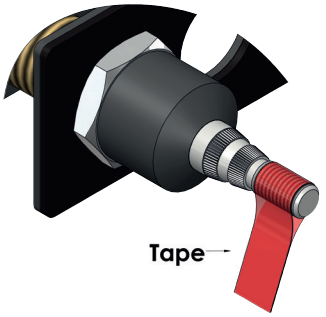

Hint!
If you have doubts regarding the park position, make a vane with tape to simulate the position of the arms.

Attention!
This wiper model 223 is suitable for wiper arms model MD1 (PU) up to 750 mm and wiper-blades up to 750 mm.

1. Place the wiper arm and blade assembly on the shafts. Fasten the nuts loosely onto the shafts.

Attention!
To ensure the arm has the right spring pressure, install the wiper arm in such a way that the shaft makes a 90° angle with the window (figure left) and that the shaft makes a 90° angle with the wiper arm (figure right). If this is not the case, please install spacer(s) to make the 90° angles.

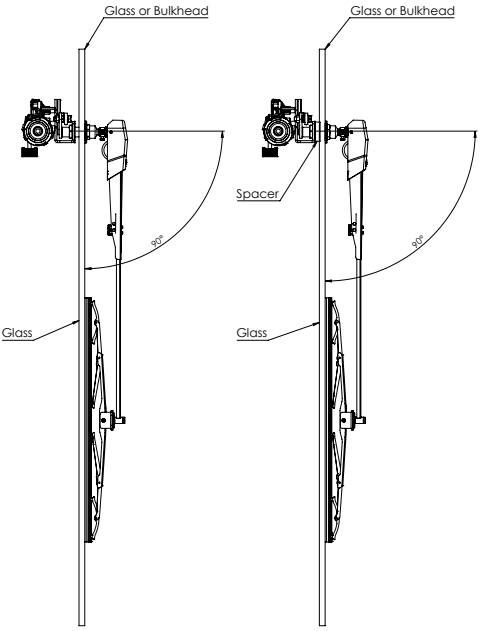

2. Switch on the power and test the motor briefly again to check the wiped area.
3. When the wipe arc is correct, adjust the position and the length of the arm as necessary. Tighten the nuts to the correct torque (16,3Nm/12ft.lbs).

4. Operation & Use

4.1 Preparation for first use

When the wiper has been installed and adjusted, the system can be prepared for first use. We recommend a thorough inspection of the system to ensure proper operation.

Check:

- there are no leaks where the shafts go through the bulkhead;
- the wiping arc cleans the entire window;
- the park position is correct.

If the wiping arc or the park position is wrong, adjust them again.
Follow the procedure in paragraph 5.3.

4.2 Normal operation

All Exalto windscreen wipers are provided with the following functions:

- low speed;
- high speed;
- self parking.

Do not use the wiper on a dry window; excessive wear of the blades and the motor will occur in this case. Because of the wide variety of wiper switches, refer to the user manual for the installed switch to learn about the functions of that specific switch. In the back of this manual you will find some general controls and its wiring instructions.

5. Maintenance

5.1 General maintenance

To keep the Exalto wiper in good condition, you are advised to:

- clean wiper arms and blades with fresh water after every journey in salt water (to prevent salt from clogging moving parts);
- never use the wiper on a dry window.

5.2 Servicing

As long as the wiper system functions normally and is kept in good shape (see paragraph 5.1), servicing the motor is not necessary. Check yearly (monthly when used intensively) if the wiper blades are worn. Replace blades when worn or when the blades leave many stripes across the glass. In case of failure or adjustments, have servicing done solely by qualified mechanics. In chapter 6, Troubleshooting, a list is given of possible problems and their solutions.

5.3 Changing the wiping arc and park position

If the wiped area is not optimal, the wipe arc and park position can be changed. Always disconnect the electric before opening the housing.

5.3.1 Adjusting the wipe arc

1. Remove the wiper arms from the shafts;
2. Remove the wipe arc disc from the motor shaft;
3. Relocate the pin into the hole of the desired wiper arc (see chapter 5.4).
   a. Please note the pin will require mechanical press to insert and remove;
   b. The shoulder of the pin has to be pressed against the disc;
4. Run the motor briefly to park it and move the disc to the desired park position.

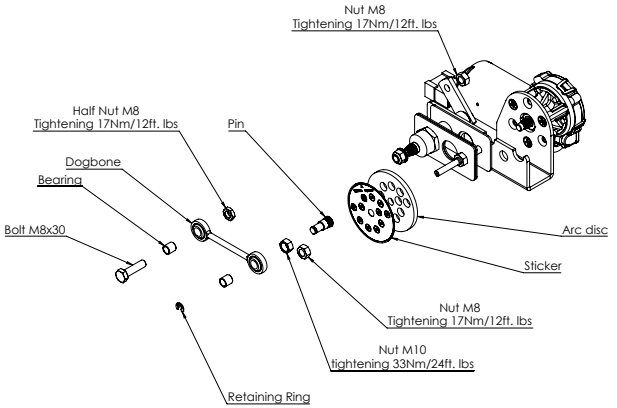

5.3.2 Adjusting the park position

1. Place the disc on the shaft, parking right or left as shown below (please note this is viewed from outside to in);
2. Place the motor lever in such a way that it forms an almost straight line with the dog bone (see drawing);
3. Tighten the disc well;
4. Place the wiper in the bulkhead;
5. Run the motor briefly to check performance;
6. Adjust the wiper arm to the correct length, if necessary;
7. Install the wiper arm in correct parking position;
8. If necessary repeat steps 6 and 7 to position wiper arm in correct parking position.

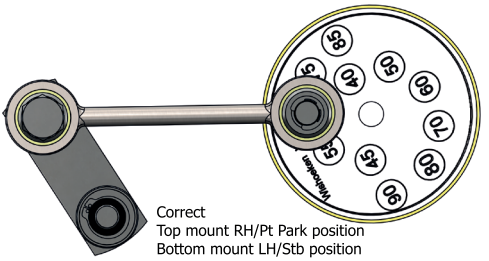

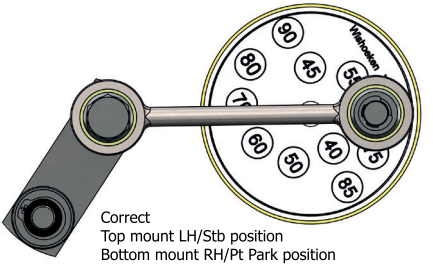

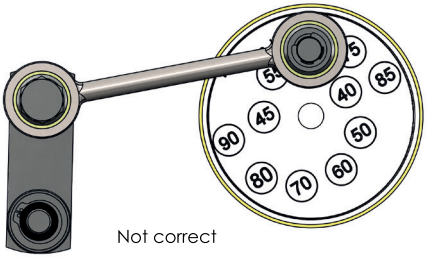

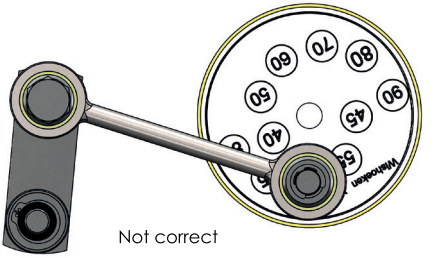

5.4 Disassembly and assembly

Prevent injuries when disassembling by disconnecting the wiper from the power supply. Keep all necessary tools within reach and remember the chapter on safety. Provide protective packaging, if you're going to store or transport the wiper assembly.

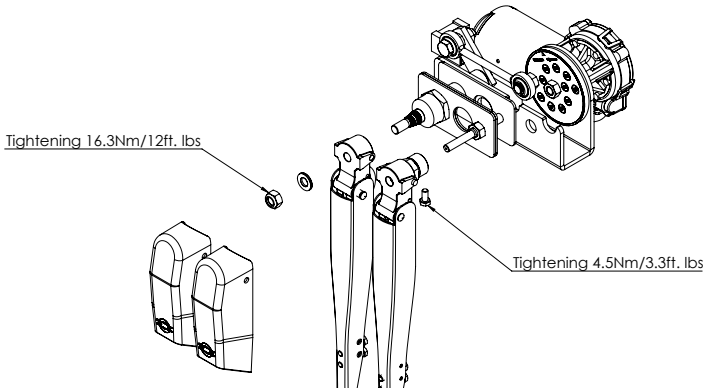

5.4.1 Removing the wiper assembly from the bulkhead or glass

1. Disconnect all the electric connections to the wiper;
2. Remove the wiper arms;
3. Remove the nuts (section 7.1, nr 7) and plates (nr 13 and 14) on the outside;
4. Remove the wiper from the holes in the bulkhead or glass;
5. If you want to replace the wiper, follow chapter 3.

5.4.2 Disassembling the drive crank lever

1. Disconnect all the electric connections to the wiper;
2. Remove the wiper from the bulkhead or glass (see 5.4.1);
3. Unscrew the nut (section 7.1, nr 23) and bolt (nr 22) on the disc (nr 10) and remove the lever;
4. For adjusting the wipe arc, follow section 5.3.

5.4.3 Removing the motor from the wiper assembly

1. Disconnect all the electric connections to the wiper;
2. Remove the wiper arm (see 5.4.1);
2. Disassemble the drive crank lever (nr 10) from the motor;
3. Unscrew the three bolts of the motor (section 7.1, nr 18) and remove the motor;
4. When replacing, bolt the motor on the housing and follow section 5.3 to install the drive crank lever and set to the correct park position.

6. Troubleshooting

In this chapter, several malfunctions are mentioned combined with possible causes and solutions. Please leave servicing to qualified mechanics.

6.1 Wiper does not work after switching on

• Possible causes:

1. Wiper switch is not working properly.
   Solution: Test and replace it. Check if the current is (and keeps being) too high.
2. Burned or incorrectly sized fuse.
   Solution: Test and replace it. Check if the current is (and keeps being) too high
3. Electrical connections are wired incorrectly or might be damaged.
   Solution Measure the voltage across the motor and check all connections are correct.
4. The wiper motor has failed.
   Solution:. Replace the motor and check for excessive drag or high current.

6.2 Wiped area or park position is not correct

• Possible causes:

1. The wiper arms were placed without parking the motor first.
   Solution: Remove the wiper arms. Run the motor to the park position and re-install the arms.
2. The wipe arc is set wrong or has changed due to high loads (e.g. spring pressure of arms too high, excessive drag).
   Solution: Determine the wiping arc if needed (see paragraph 5.4) and set the wiping arc again (see paragraph 5.3).
3. The wires are connected incorrectly.
   Solution: Check and reconnect the wiring (see the scheme in paragraph 3.3).

6.3 Motor runs, but arms do not move

• Possible causes:

1. Mechanical joints are loose.
   Solution: Replace worn parts or tighten as required.
2. Parts are broken.
   Solution: Replace broken parts, re-adjust as required.
3. Splines of shafts are worn
   Solution: Replace all loose, broken or worn parts and adjust as required.

7. Drawings & Schematics

7.1 Assembly overview

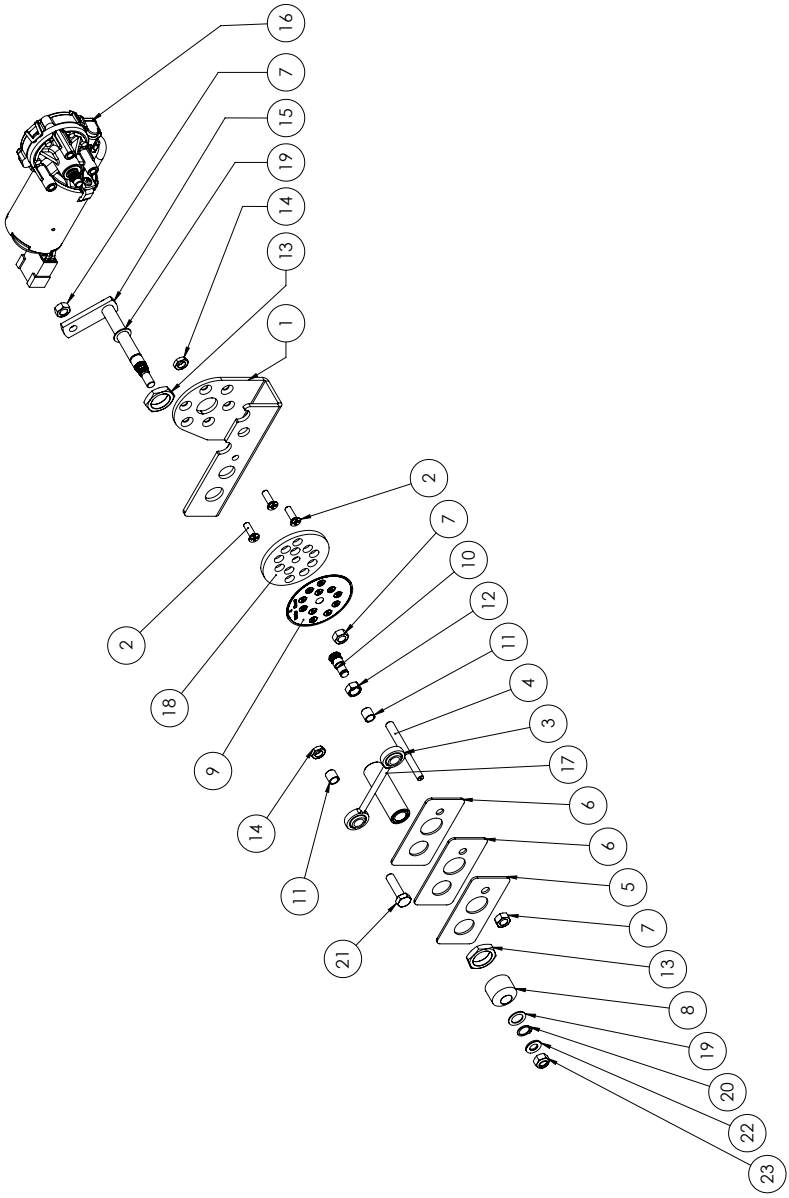

7.2 Parts list

Pos.	QTY.	Description EN	Part Nr/Note
1	1	Wiper housing for 223	2100.104
2	3	SS Flathead bolt M6×16	0965HA406016
3	1	Connecting rod Ø10 L=85mm	2100.936
4	1	Idler spindle bh = 20 mm KK/BD/BS	2100.446
	1	Idler spindle bh = 35 mm KK/BD/BS	2100.441
	1	Idler spindle bh = 55 mm KK/BD/BS	2100.447
	1	Idler spindle bh = 75 mm KK/BD/BS	2100.448
	1	Idler spindle bh = 100 mm KK/BD/BS	2100.449
	1	Idler spindle bh = 125 mm KK/BD/BS	2100.451
5	1	Cover plate SS 223BS 50mm	2100.481
6	2	Coverplate Nitril 223BS 50mm	2100.491
7	3	Nut s.s. M8 A4 din934	0934A408
8	1	Weathercap M20	2100.361
9	1	Sticker arc disc 235KK/KD/KG/KJ/BD	2100.931
10	1	Linking pen M8 235KK/KD/KG/KJ/B	2100.920
11	2	PA6.6 bearingØ8×10×10	2100.926
12	1	Nut M10 SW 13	2100.354
13	2	Nut M20x1	2100.350
14	2	Nut M8 flat	0439A408
15	1	Driven spindle + lever bh = 20	2100.364_A
	1	Driven spindle + lever bh = 35	2100.360_A
	1	Driven spindle + lever bh = 55	2100.366_A
	1	Driven spindle + lever bh = 75	2100.368_A
	1	Driven spindle + lever bh = 100	2100.370_A
	1	Driven spindle + lever bh = 125	2100.372_A
16	1	Motor 12Volt 23Nm	2100.023012
	1	Motor 24Volt 25Nm	2100.025024
17	1	Liner M20x1mm bh=20	2100.326
	1	Liner M20x1mm bh=35	2100.321
	1	Liner M20x1mm bh=55	2100.327
	1	Liner M20x1mm bh=75	2100.328
	1	Liner M20x1mm bh=100	2100.329
	1	Liner M20x1mm bh=125	2100.331
18	1	Arc disc for wiper235KK/KD/KG/KGV/KJB/BD	2100.930
19	2	Plain washer s.s. M12x1,0	2100.400
20	1	circlip 12mm	0471A2012
21	1	circlip 6mm	6799A4006
22	1	Hexagon bolt, Din933-A4-M8x30	0933A408030
23	1	Ring-DIN125A-A4-M8	0125A408
24	1	Self-locking nut A4 M8	0985A408

7.3 Motor Wiring Schematic - Connection data

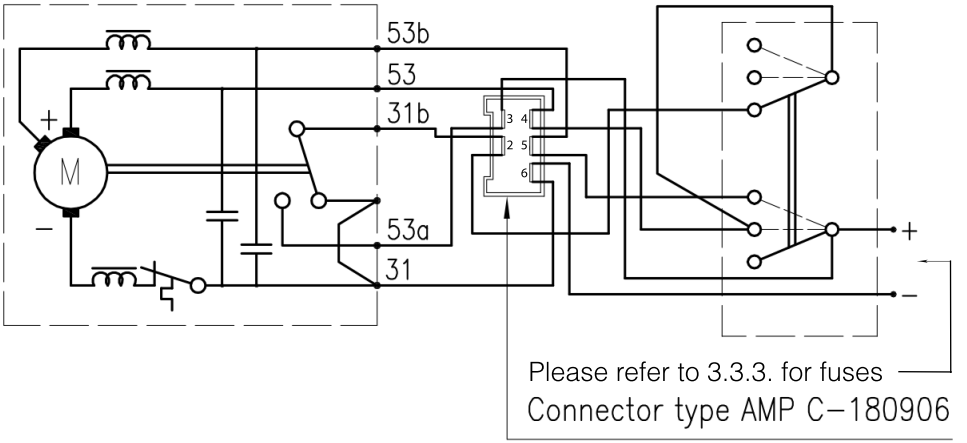

7.4 Wiring diagrams for switches and control systems.

Exalto wiper motors can be connected through a wide variety of simple switches to complex controllers. Below you will find some connection wiring diagram examples of Exalto switches and controllers. Please refer for detailed instructions to the specific switch or controller manual.

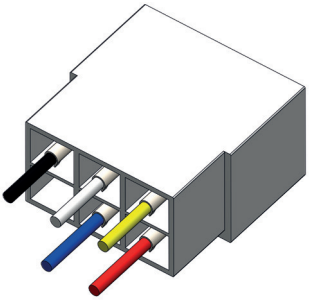

Function	Polarity	Motorcode	Switch code	Cable
High speed	+	53b	H	white
Low speed	+	53	L	yellow
Negative	-	31		black
Stop - self park		31b	P	blue
positive	+	53a	B	red

Switch 2134 & 2135:

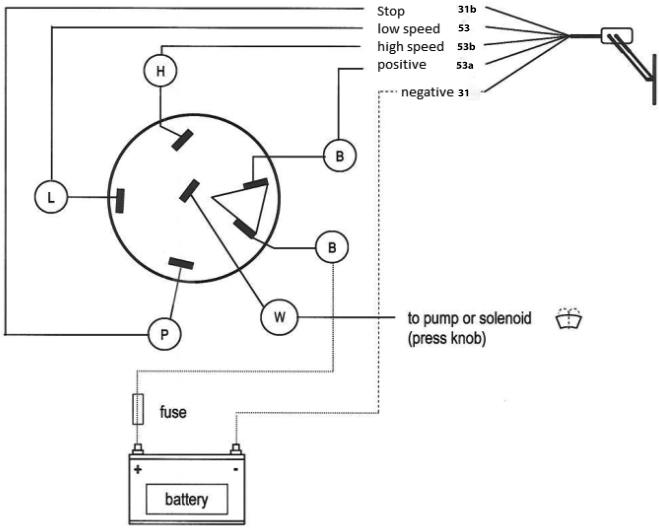

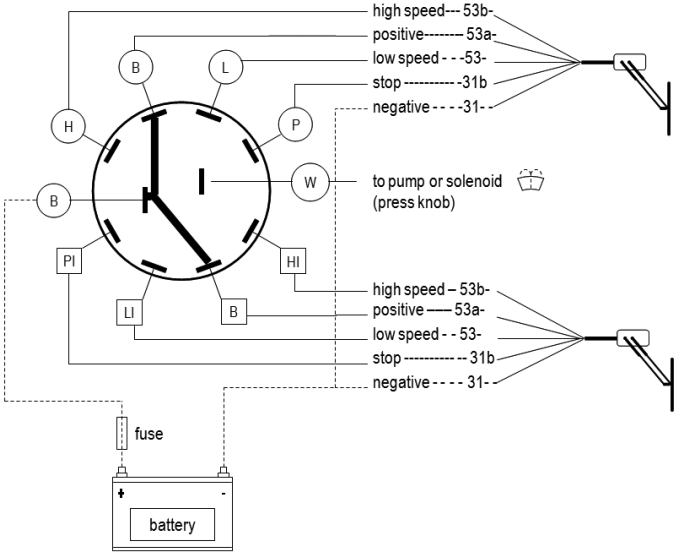

Function	Polarity	Motorcode	Switch code	Cable
High speed	+	53b	H	white
Low speed	+	53	L	yellow
Negative	-	31		black
Stop - self park		31b	P	blue
positive	+	53a	B	red

Carling switching VEB1: (Exalto number 70906425.SET) as per following details which is wiper switch specific.

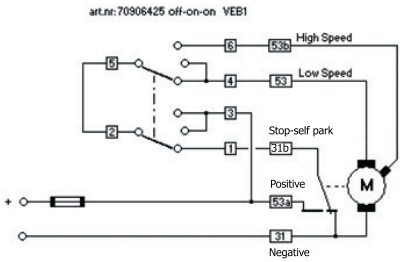

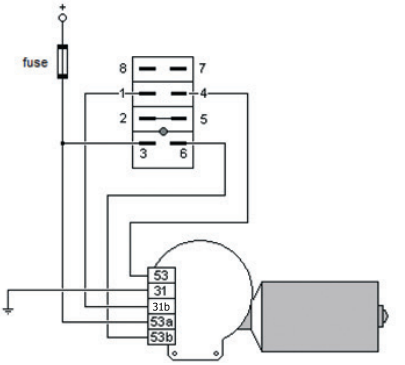

For a standard 3 stage switch of Carling or alternative:

This scheme below has to be used. This scheme can also be used for the case of digital switching modules with only simple output channels.

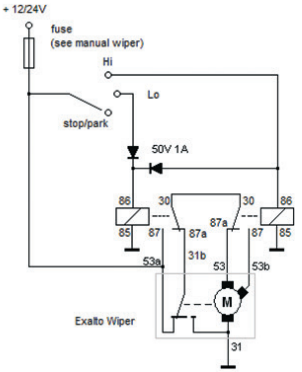

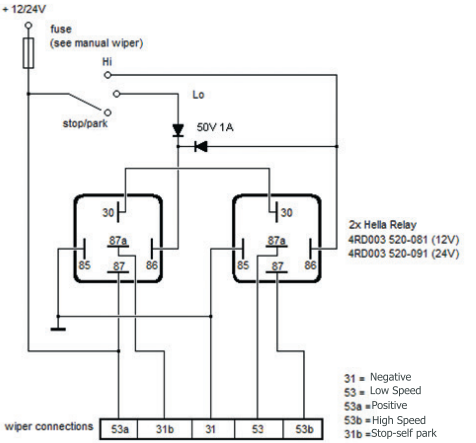

Function	Polarity	Motorcode	Switch code	Cable
High speed	+	53b	H	white
Low speed	+	53	L	yellow
Negative	-	31		black
Stop - self park		31b	P	blue
positive	+	53a	B	red

Switch 2158 & 2159:

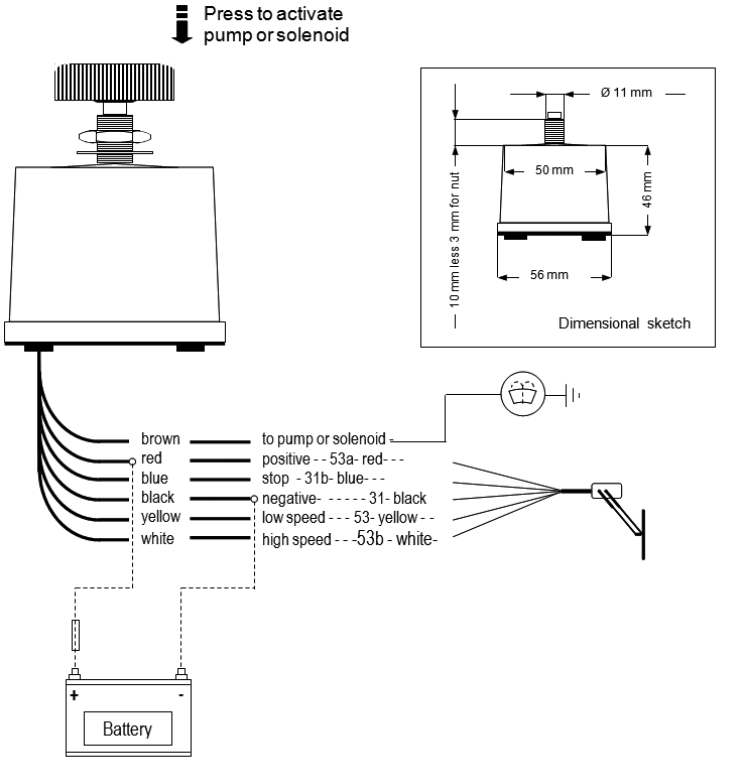

Please refer to the instruction manuals as supplied with the units for motor wiring.

Switch panel CT3EX:

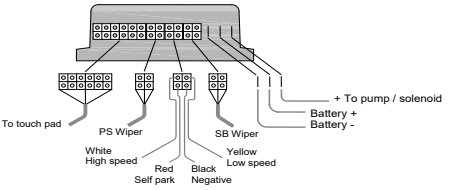

Wiring detail of wiper connections on relay box

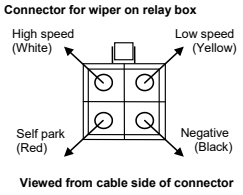

Function	Polarity	Motorcode	Switch code	Cable
High speed	+	53b	H	white
Low speed	+	53	L	yellow
Negative	-	31		black
Stop - self park		31b	P	blue
positive	+	53a	B	red

Switch 210341:

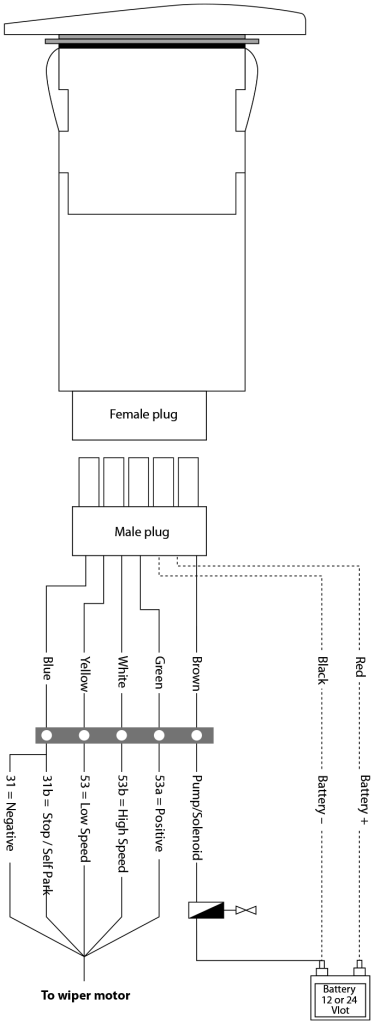

Switch 210342:

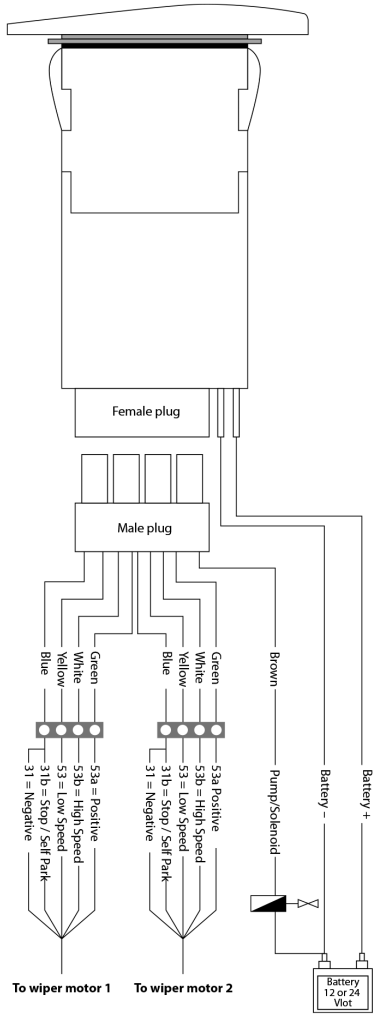

Function	Polarity	Motorcode	Switch code	Cable
High speed	+	53b	H	white
Low speed	+	53	L	yellow
Negative	-	31		black
Stop - self park		31b	P	blue
positive	+	53a	B	red

Switch panel 210321224-210351224:

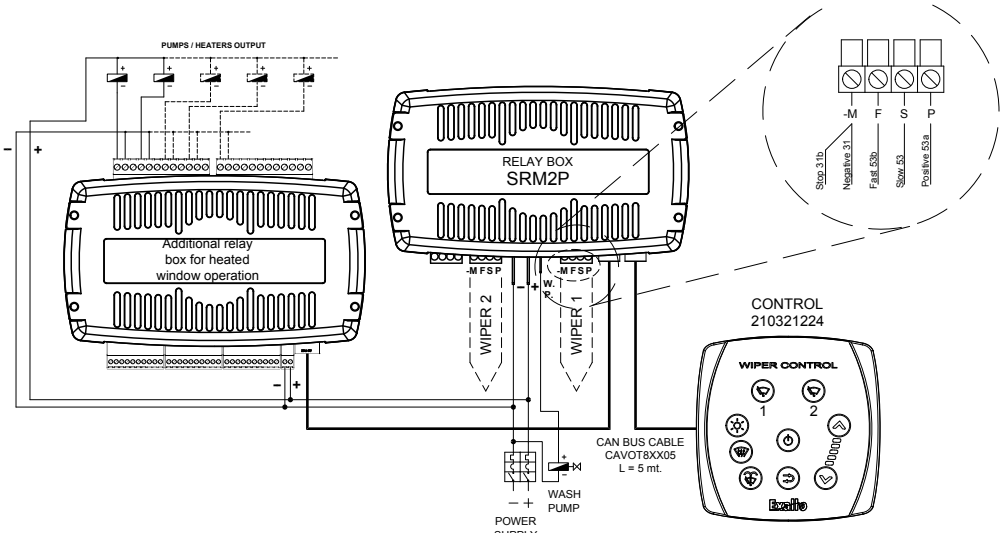

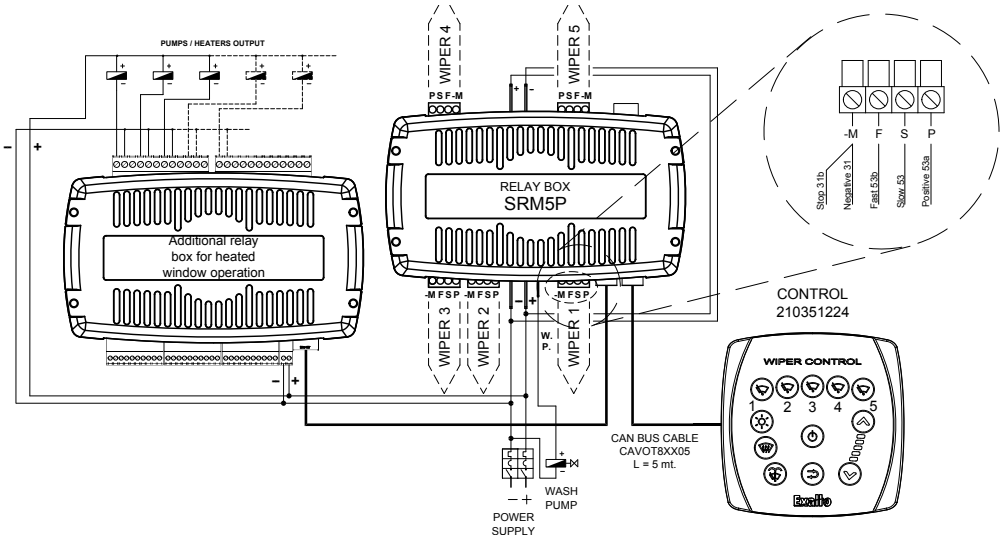

Function	Polarity	Motorcode	Switch code	Cable
High speed	+	53b	H	white
Low speed	+	53	L	yellow
Negative	-	31		black
Stop - self park		31b	P	blue
positive	+	53a	B	red

Exalto
Wiper Technologies since 1965

Exalto Wiper Technologies B.V.
Nijverheidsstraat 12
3371 XE Hardinxveld-Giessendam
The Netherlands
Phone: +31 (0)184 615 800
E-mail: wipers@exalto.com

hereby declares that Exalto windscreen wiper type 223BDO complies to the following harmonised standards:

Pleasure yachts electric systems
• NEN-EN-ISO 10133:2017 Extra-low voltage D.C. installations
(regarding color codes)

Hardinxveld-Giessendam 01-10-2017 (m-d-y)

www.exaltowipers.com

Version 09-2021