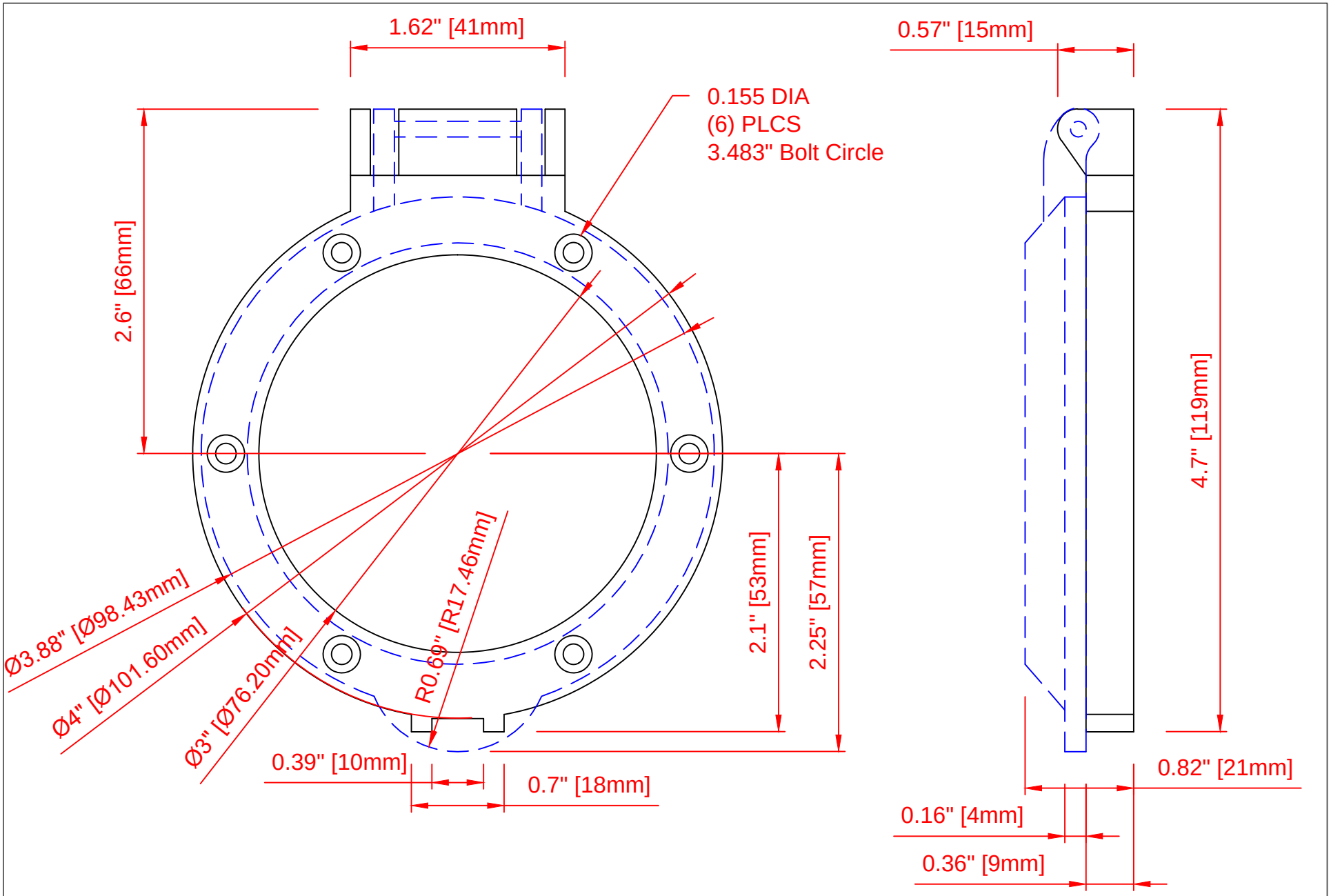

Imtra Corporation
30 Samuel Barnet Boulevard
New Bedford, MA 02745
508-995-7000

Drawn By:	Scale:
D Escalera	1:1
Date Drawn:	Note:
2-11-19	

MF801052 Foot Switch Cover