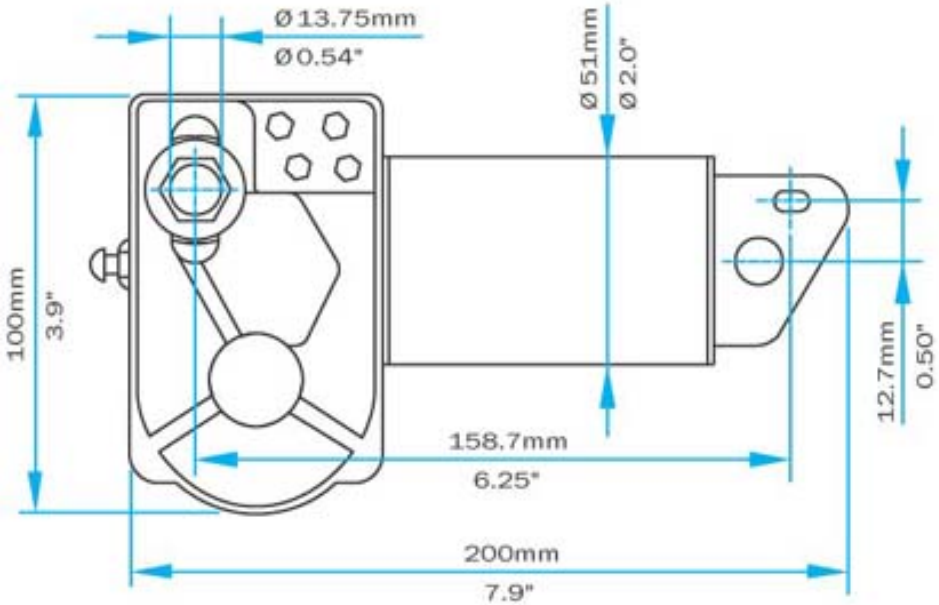

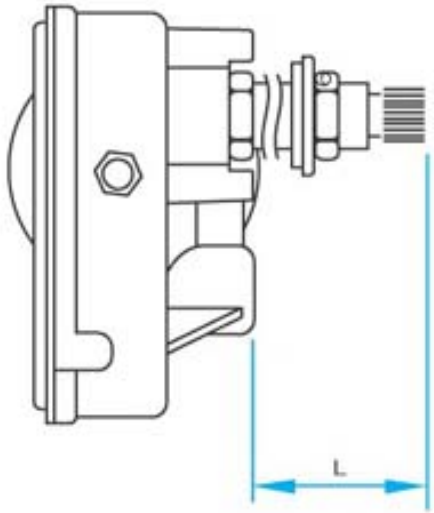

L= MOTOR SHAFT
THICKNESS
AS LISTED