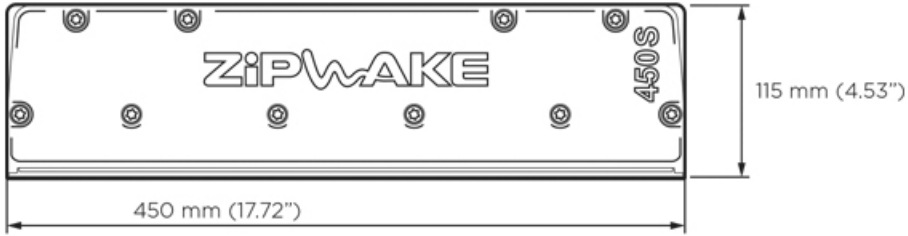
ZiPWAKE
450S
115 mm (4.53")
450 mm (17.72")

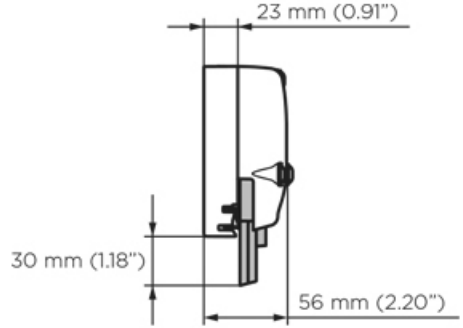
23 mm (0.91")
30 mm (1.18")
56 mm (2.20")