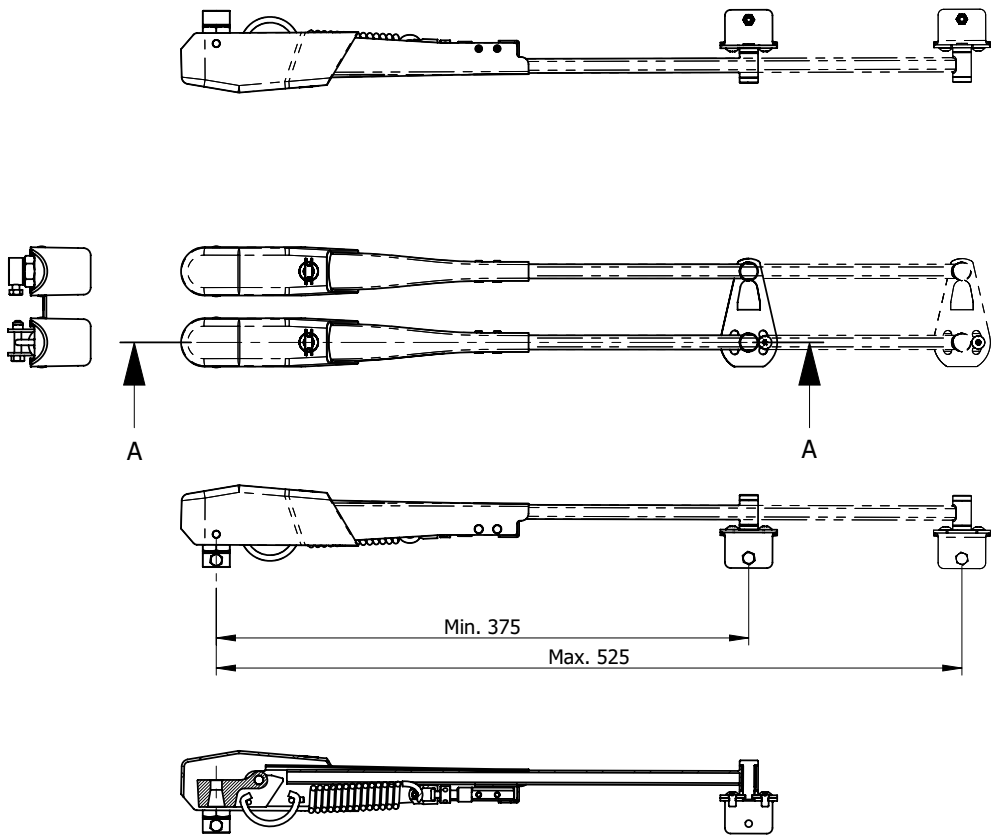

Arm adjustable from 375mm to 525mm
To set the arm to 350mm the legs have to be cut off 25mm

Project & Description	STD 2133 - Adjustable Marine Arm 2133		DIMENSIONS IN MILLIMETERS, ANGLES IN DEGREES TOLERANCES±0.2mm, ±1º UNLESS OTHERWISE SPECIFIED
Part No. : STD 2133		Drawn : JvH	Do NOT Scale
Customer :		Date : 6-10-2011	Exalto Quality Marine Equipment
Reference :		Modified :	A4
Note :		Date : 20-12-2012	Scale 1:5
Material :		Weight : 1.10	Sheet 1 of 1

(c)copyrights Exalto