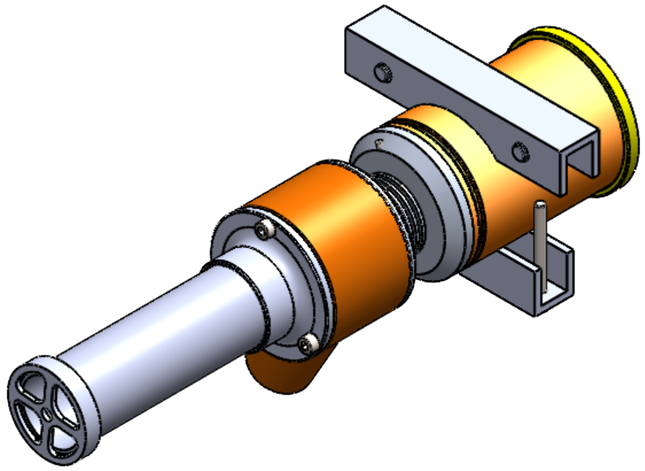

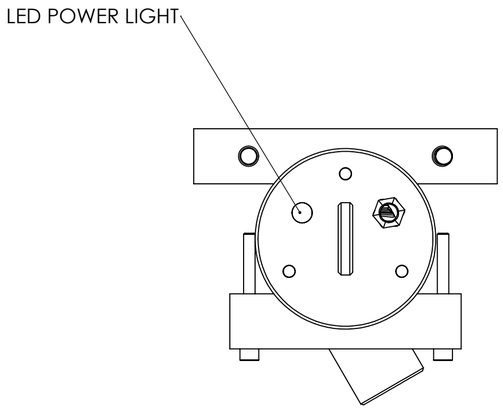

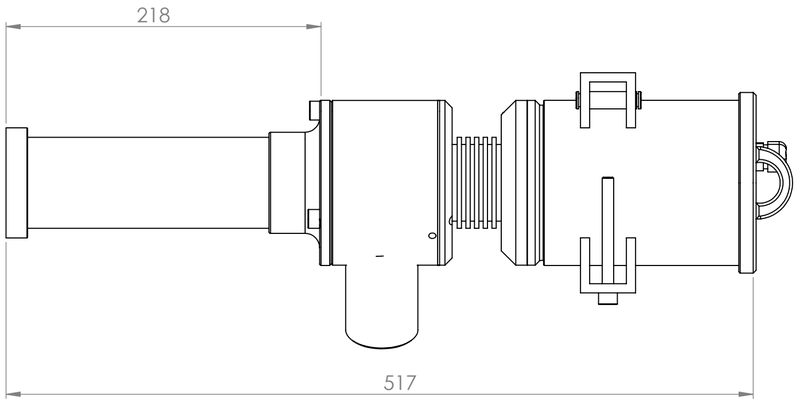

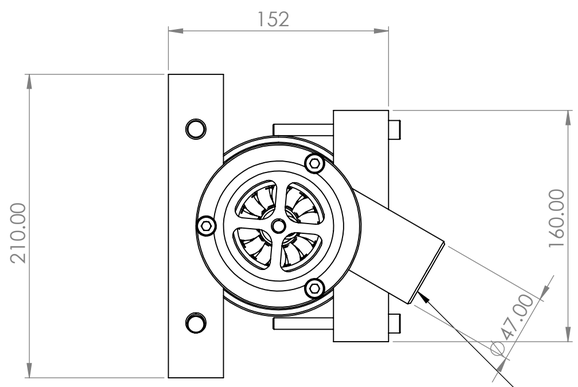

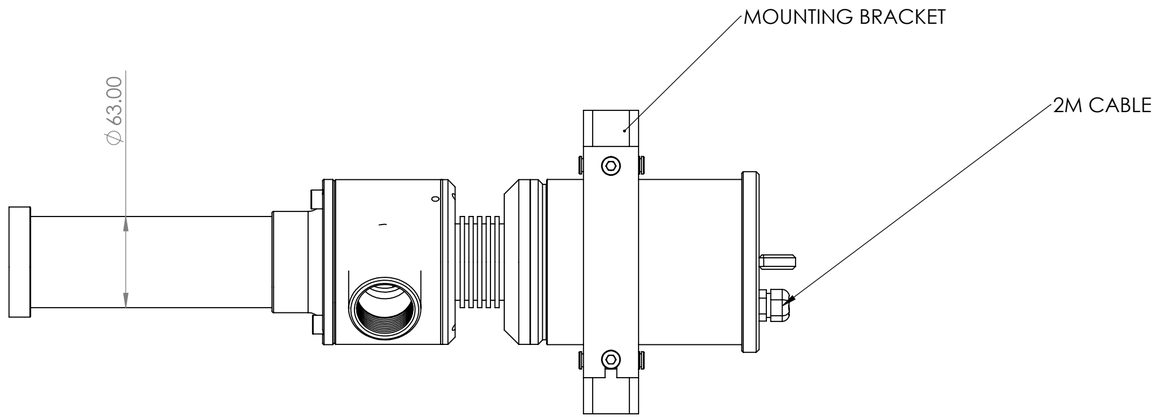

1-14 BSPT-38MM HOSE

UNLESS OTHERWISE SPECIFIED: DIMENSIONS ARE IN MILLIMETERS SURFACE FINISH: TOLERANCES: LINEAR: ANGULAR:	FINISH: AS SPEC			DEBURR AND BREAK SHARP EDGES	DO NOT SCALE DRAWING / REVISION
					SCOTSEATS KPM MARINE SSG
	NAME	SIGNATURE	DATE		TITLE:
DRAWN	JULES MORGAN				PREDATOR 200 LONG REACH
CHK'D					
APPV'D					
MFG					
Q.A				MATERIAL: AS SPEC	DWG NO. KPM-350-200 predator A2
				WEIGHT:	SCALE:1:5 / SHEET 1 OF 1